KHON® WENZHOU KHAN ELECTRONIC

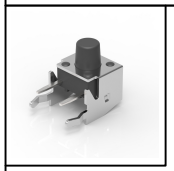

Switch drawings

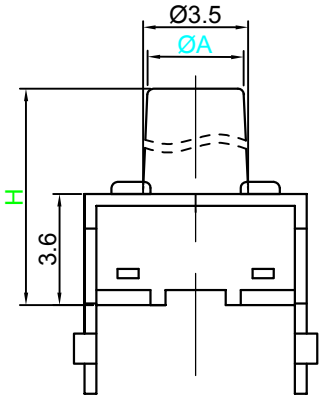

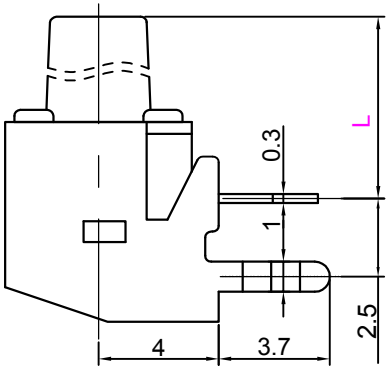

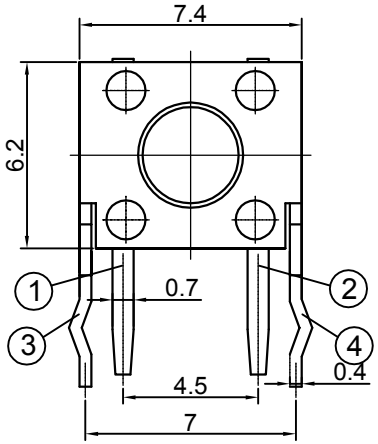

Dimensional tolerance is ± 0.2mm

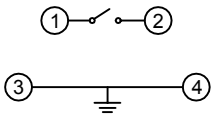

CIRCUIT DIAGRAM

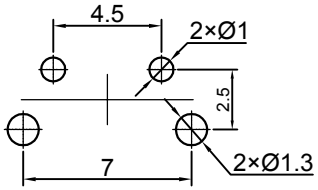

P.C.B. LAYOUT

L	H-1.15

H	6	6.3	6.5	7	7.5	7.9	8	8.1	8.5	8.8
A	3.4	3.4	3.4	3.2	3	3	3.2	3.1	3.2	3.2
H	9	9.5	10	10.3	10.5	11	11.2	11.4	11.5	11.8
A	3.2	3.2	3.2	3.1	3.1	3.1	3.1	3.2	3.2	3.2
H	12	12.5	13	13.5	14	14.5	15	15.5	16	
A	3.2	3.1	3.2	3.2	3.1	3.2	3	3.2	3.1	

Number Description

Professional Manufacturer Since 2000

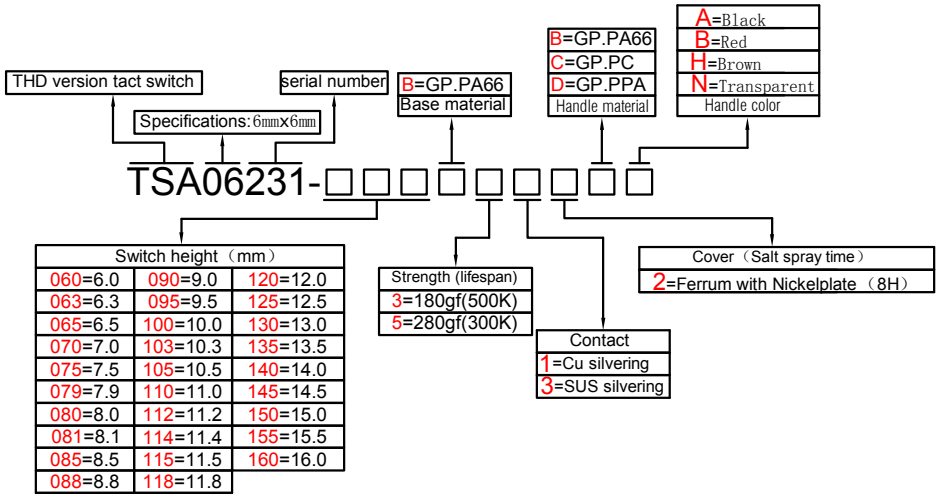

SPECIFICATIONS

Funtion:	Momentary action
Contact Arrangement:	SPST, Normally Open
Termination:	THD version

Environmental

Operating Temperature:	-25～+70℃
Relative Humidity:	（40℃）≤70%

Electrical

Contact Rating:	50mA 12V DC
Dielectric Strength:	250VAC /1min
Contact Resistance:	100mΩMax.
Insulation Resistance:	100MΩMin.
Travel:	0.25±0.1mm

Mechanical

Actuation Force:	Optional
Life Expectancy:	Optional

Materials

1.Stem:	Optional
2. Cover:	Optional
3. Contact:	Optional
4. Holder:	Optional
5. Terminal:	Ag plating Au plating

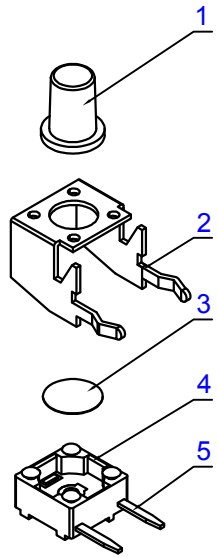

WENZHOU KHAN ELECTRONIC CO.，LTD. Add:No.92 Huifeng Road, Songhu Industrial, Yueqing 325600. Zhejiang , China Tel:+86-577-62560700 Fax:+86-577-62530255 E-mail: info@khan.cn ; sales@khan.cn