KHON® WENZHOU KHAN ELECTRONIC

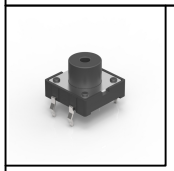

Switch drawings

Dimensional tolerance is ± 0.2mm

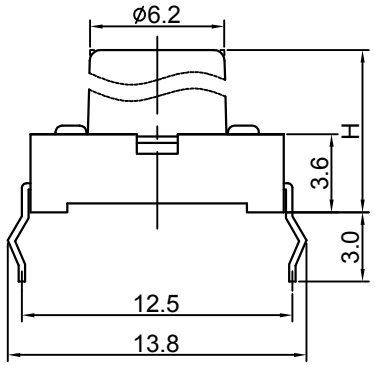

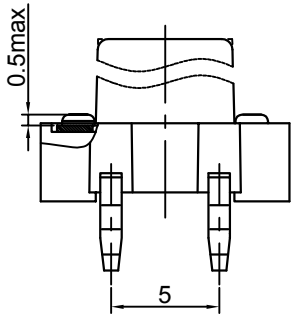

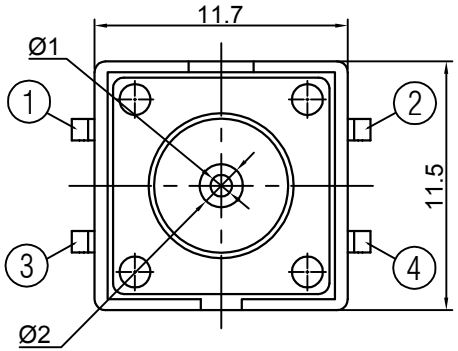

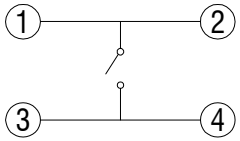

CIRCUIT DIAGRAM

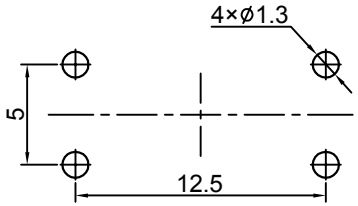

P.C.B. LAYOUT

Number Description

Professional Manufacturer Since 2000

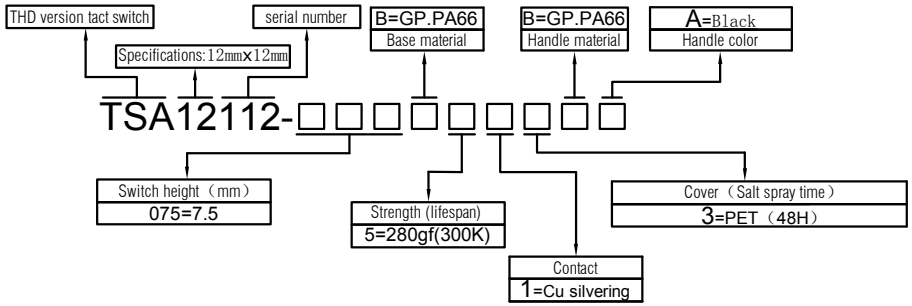

SPECIFICATIONS	
Funtion:	Momentary action
Contact Arrangement:	SPST, Normally Open
Termination:	THD version
Environmental	
Operating Temperature:	-25～+70℃
Relative Humidity:	（40℃）≤70%
Electrical	
Contact Rating:	50mA 12V DC
Dielectric Strength:	250VAC /1min
Contact Resistance:	100mΩMax.
Insulation Resistance:	100MΩMin.
Travel:	0.25±0.1mm
Mechanical	
Actuation Force:	Optional
Life Expectancy:	Optional

Materials	
1.Cover:	Optional
2. Stem:	Optional
3. Contact:	Optional
4. Holder:	Optional
5. Terminal:	Ag plating Au plating

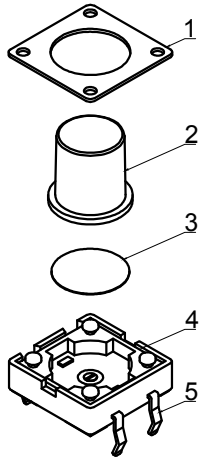

WENZHOU KHAN ELECTRONIC CO.，LTD. Add:No.92 Huifeng Road, Songhu Industrial, Yueqing 325600. Zhejiang , China Tel:+86-577-62560700 Fax:+86-577-62530255 E-mail: info@khan.cn ; sales@khan.cn