KHON® WENZHOU KHAN ELECTRONIC

Switch drawings

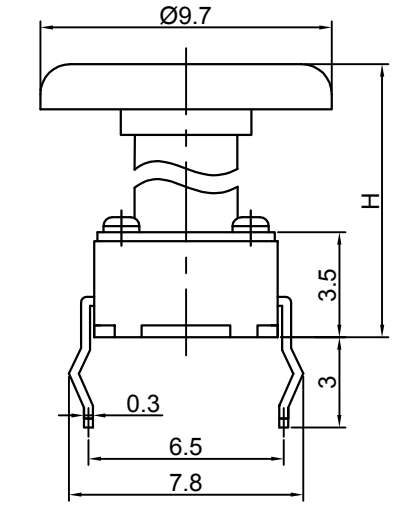

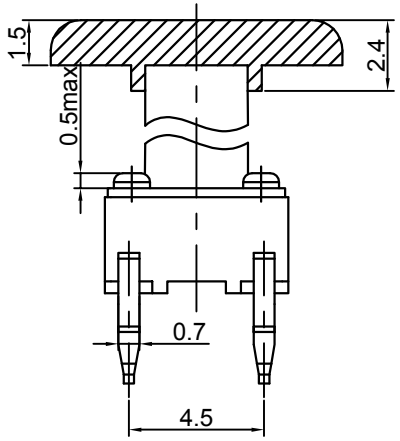

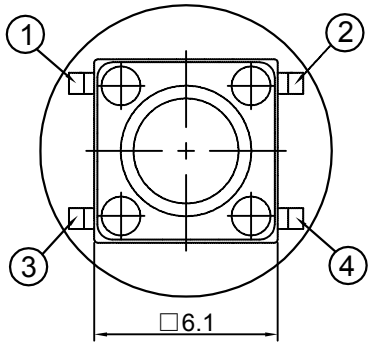

Dimensional tolerance is ± 0.2mm

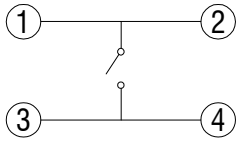

CIRCUIT DIAGRAM

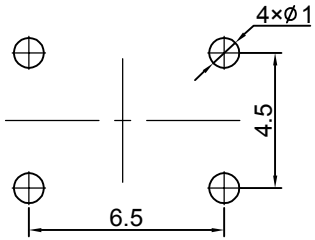

P.C.B. LAYOUT

H	7.5	7.9	8	8.1	8.5	8.8	9	9.5	10	10.3	10.5	11
H	11.2	11.4	11.5	11.8	12	12.5	13	13.5	14	14.5	15	15.5
H	16	16.5	17	17.1	17.5	18	18.5	18.5	19	19.5	20	20.5
H	21	21.2	21.7	22.5	23.5	24.5	25	26	26.3	26.5	27.5	

Number Description

Professional Manufacturer Since 2000

serial number
Specifications: 6mmx6mm
THD version tact switch

B=GP.PA66
D=GP.PPA
Base material

B=GP.PA66
C=GP.PC
D=GP.PPA
Handle material

A=Black
B=Red
H=Brown
N=Transparent
Handle color

Socket: No
Cap: SC117

TSA06131-□□□□□□□□□-0070

Switch height（mm）			
075=7.5	112=11.2	160=16.0	212=21.2
078=7.8	114=11.4	165=16.5	217=21.7
080=8.0	115=11.5	170=17.0	225=22.5
081=8.1	118=11.8	171=17.1	235=23.5
085=8.5	120=12.0	175=17.5	245=24.5
088=8.8	125=12.5	180=18.0	250=25.0
090=9.0	130=13.0	185=18.5	260=26.0
095=9.5	135=13.5	190=19.0	263=26.3
100=10.0	140=14.0	195=19.5	265=26.5
103=10.3	145=14.5	200=20.0	275=27.5
105=10.5	150=15.0	205=20.5	
110=11.0	155=15.5	210=21.0	

Strength (lifespan)
2=130gf(500K)
3=180gf(500K)
5=280gf(300K)
6=360gf(100K)
8=250gf(300K)

Contact
1=Cu silvering
3=SUS silvering

Cover（Salt spray time）
1=Copper CuSn plating（48H）
2=Ferrum with Nickelplate（8H）
3=PET（48H）

SPECIFICATIONS

Funtion:	Momentary action
Contact Arrangement:	SPST, Normally Open
Termination:	THD version
Environmental	
Operating Temperature:	-25～+70℃
Relative Humidity:	（40℃）≤70%
Electrical	
Contact Rating:	50mA 12V DC
Dielectric Strength:	250VAC /1min
Contact Resistance:	100mΩMax.
Insulation Resistance:	100MΩMin.
Travel:	0.25±0.1mm
Mechanical	
Actuation Force:	Optional
Life Expectancy:	Optional

Materials

1.Cap:	Nonoptional
2.Stem:	Optional
3. Cover:	Optional
4. Contact:	Optional
5. Holder:	Optional
6. Terminal:	Ag plating Au plating

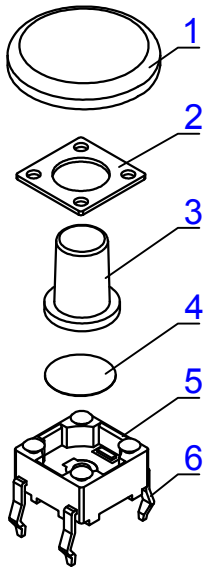

WENZHOU KHAN ELECTRONIC CO.，LTD. Add:No.92 Huifeng Road, Songhu Industrial, Yueqing 325600. Zhejiang , China Tel:+86-577-62560700 Fax:+86-577-62530255 E-mail: info@khan.cn ; sales@khan.cn